ASSEMBLY INSTRUCTION

ITEM#:29261 161565 161566 192505

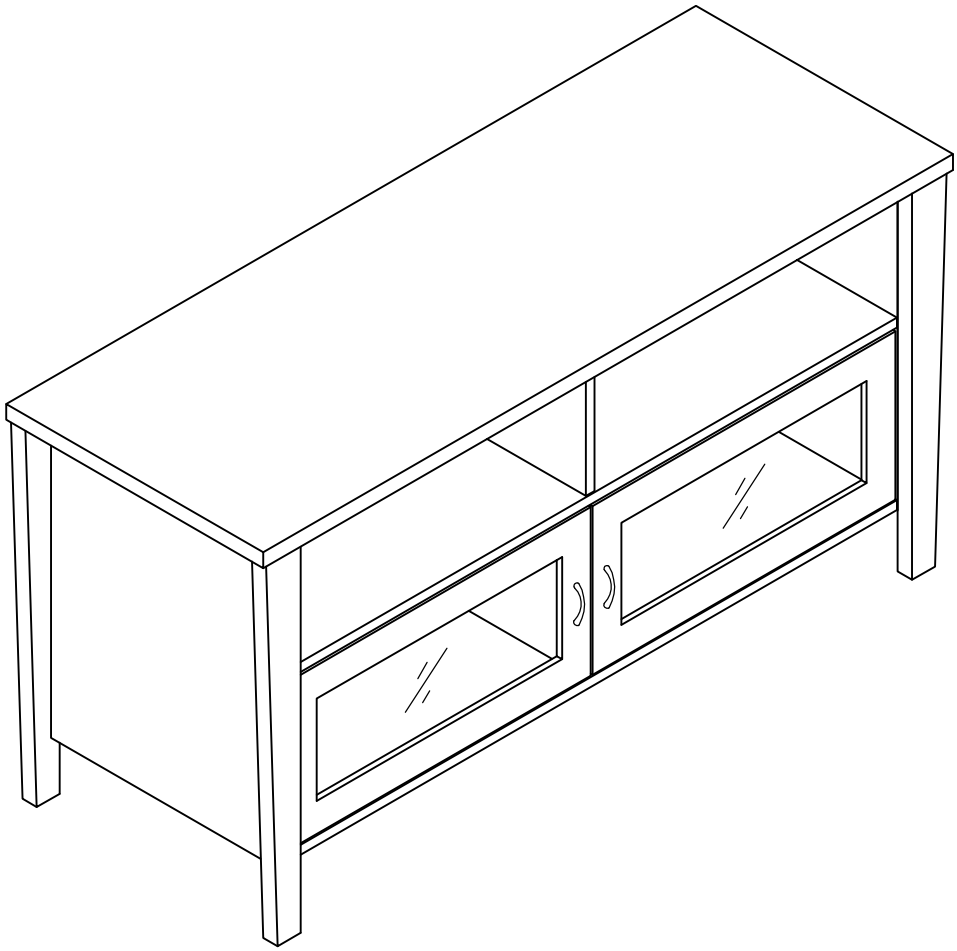

ASSEMBLY INSTRUCTION

PLEASE READ BEFORE ASSEMBLING!

Tip #1: Make sure you've taken all the pieces and hardware out of its packaging before discarding the box.

Tip #2: Using page 2 and/or page 3 of instruction manual make sure all pieces and hardware are accounted for.

Tip #3: Read manual before assembling, it helps!

ITEM#:29261
161565 161566

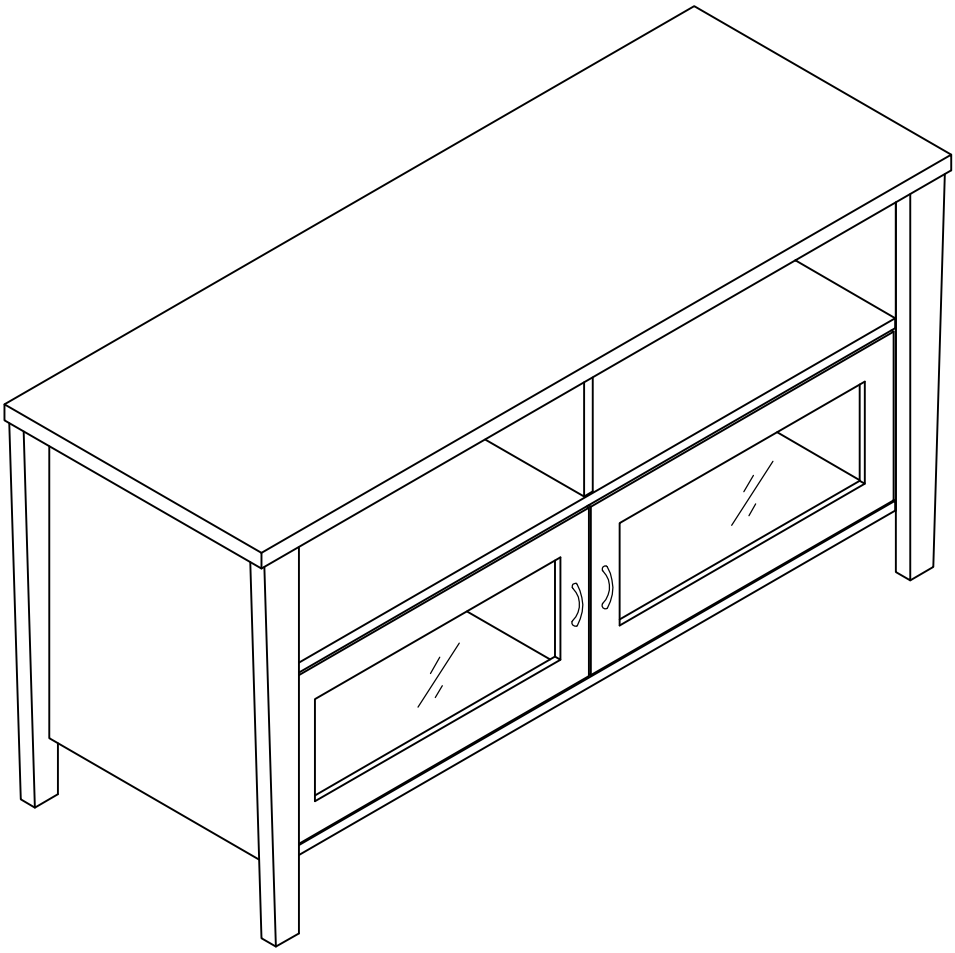

PARTS IDENTIFICATION

ITEM#:29261
161565 161566

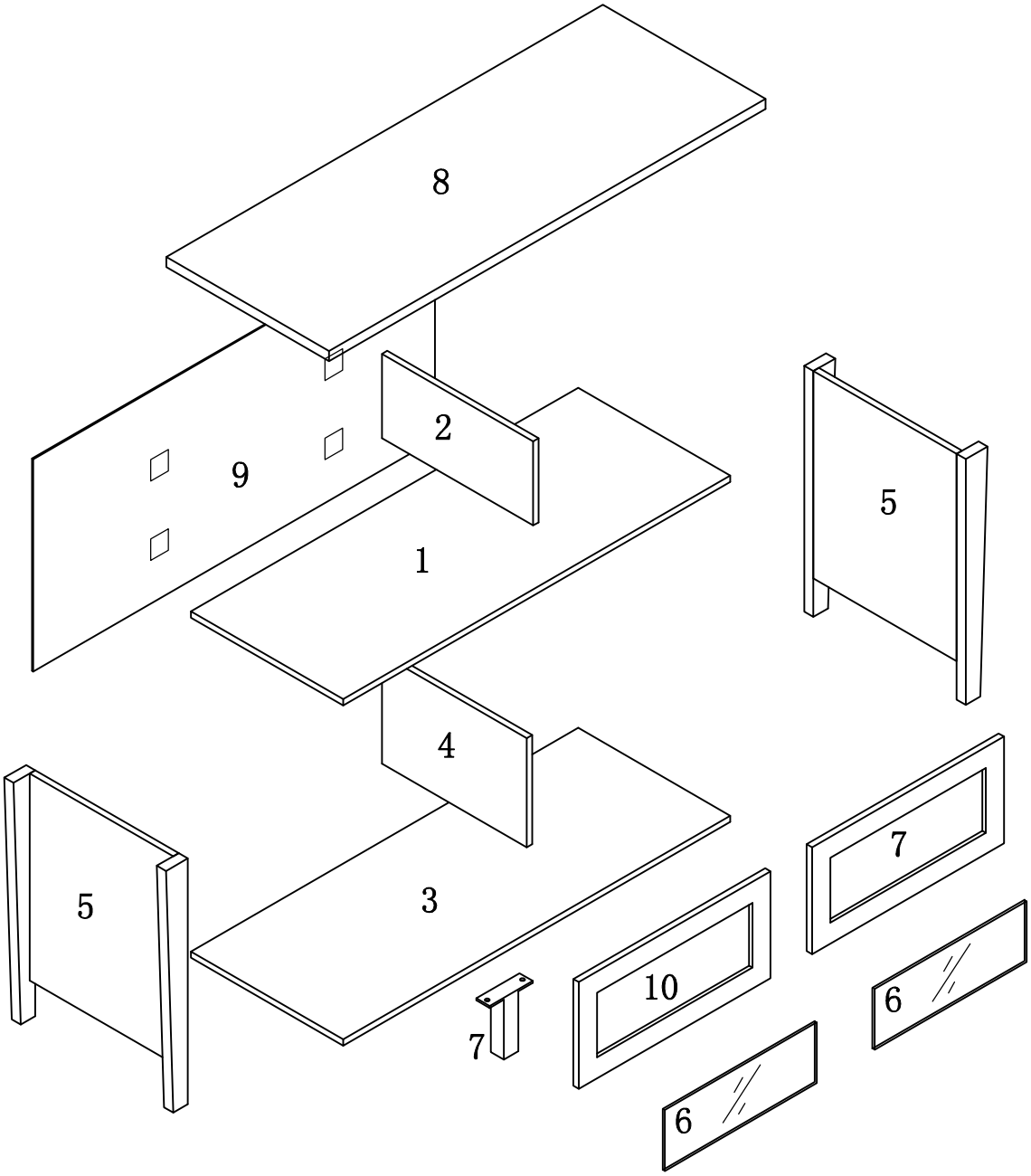

(1)	1pc	(7)	1pc
(2)	1pc	(8)	1pc
(3)	1pc	(9)	1pc
(4)	1pc	(10)	1pc
(5)	2pcs		
(6)	2pcs		

HARDWARE IDENTIFICATION

ITEM#:29261
161565 161566

A		⌀8 x 29	16pcs
B		⌀15	16pcs
C		⌀8 x 25	22pcs
D	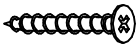	⌀4 x 30	4pcs
E	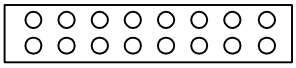	⌀18	16pcs
F	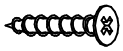	⌀4 x 16	2pcs
G			40pcs
H		64#	2pcs
I		⌀4 x 20	4pcs
J	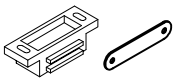		2sets
K		⌀3x14	4pcs
L	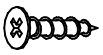	⌀3x16	4pcs
M			2pcs
N		⌀3. 5x12	8pcs
O			8pcs
P		⌀16	4pcs
Q	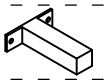	80 x 25×97	1pc

HARDWARE IDENTIFICATION

ITEM#:29261
161565 161566

R		197×5×1	1pc
S	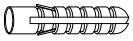	⌀8X40	1pc
T		⌀4 x 25	1pc
U	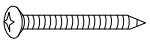	⌀5X40	1pc
V		12×12×1	2pcs
W	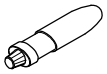	Glue: For securing please apply to wood dowel first before inserting into panel	1pc

HOW TO

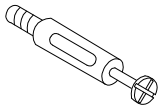

Cam Bolt

Cam Lock

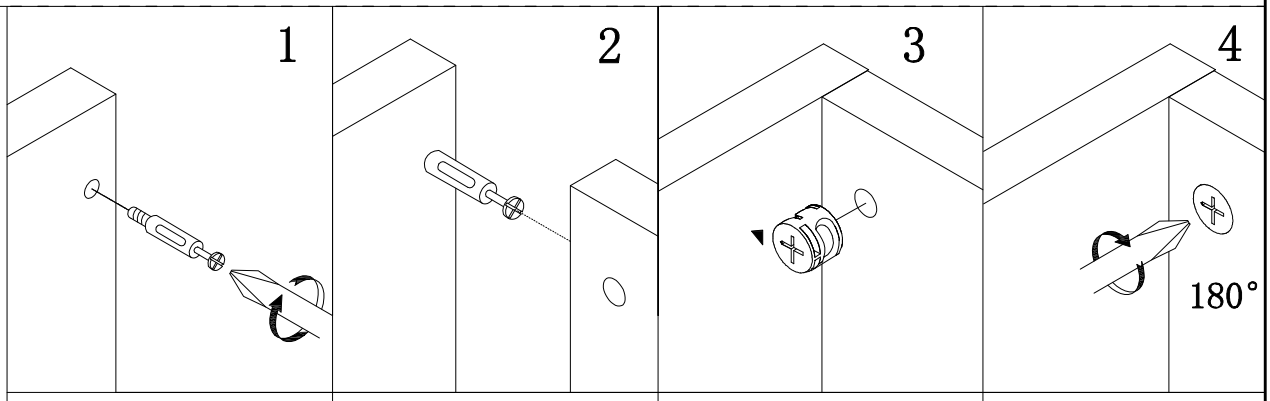

1. Screw Cam Bolt into panel.
2. Insert Cam Bolt into bolt hole of joining panel.
3. Insert Cam Lock. arrow facing bolt.
4. Gently turn Cam Lock clockwise to lock position.

ASSEMBLY INSTRUCTION

ITEM#:29261

161565 161566

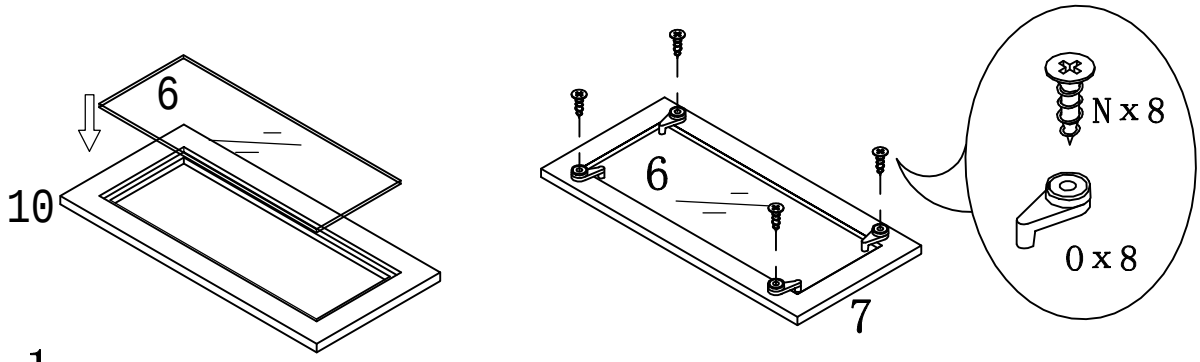

STEP 1

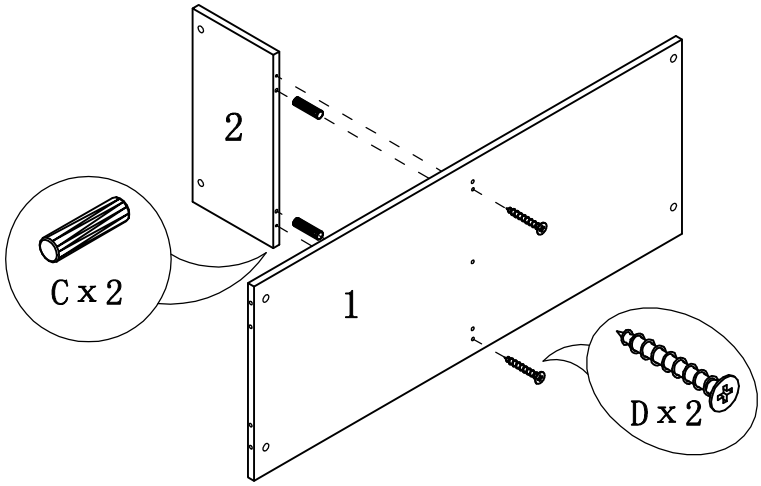

STEP 2

STEP 3

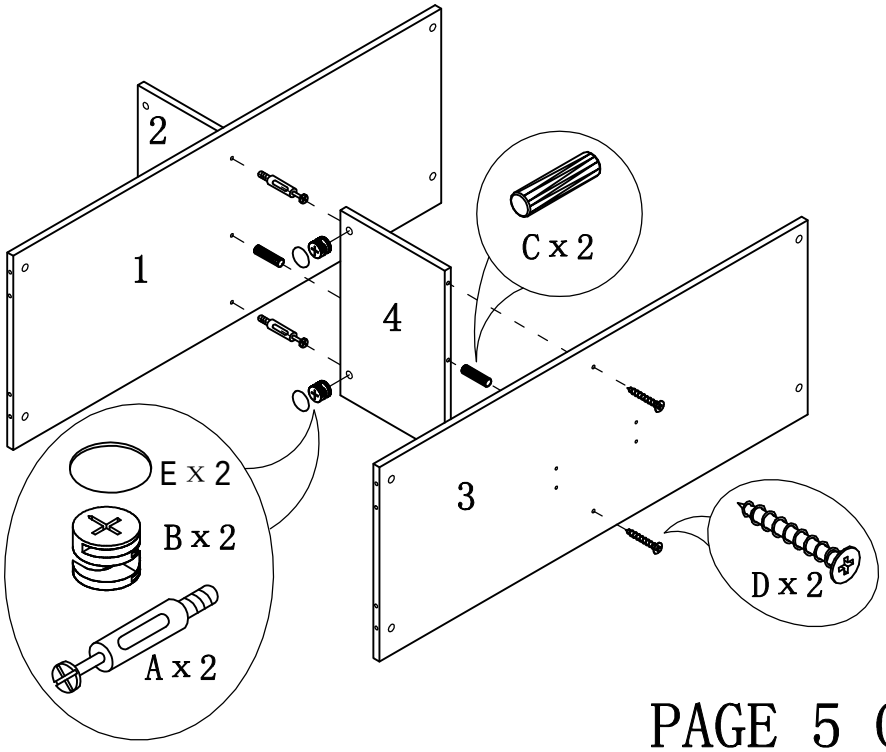

ASSEMBLY INSTRUCTION

ITEM#:29261
161565 161566

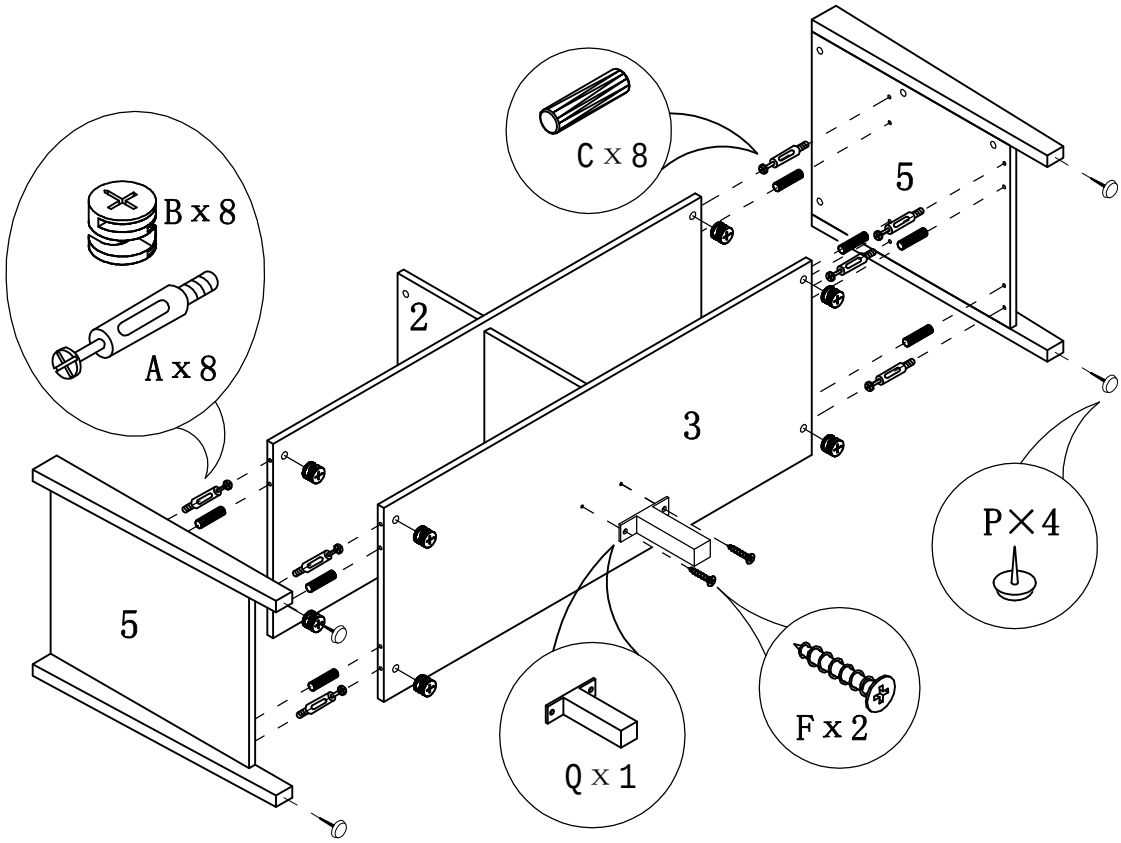

STEP 4

STEP 5

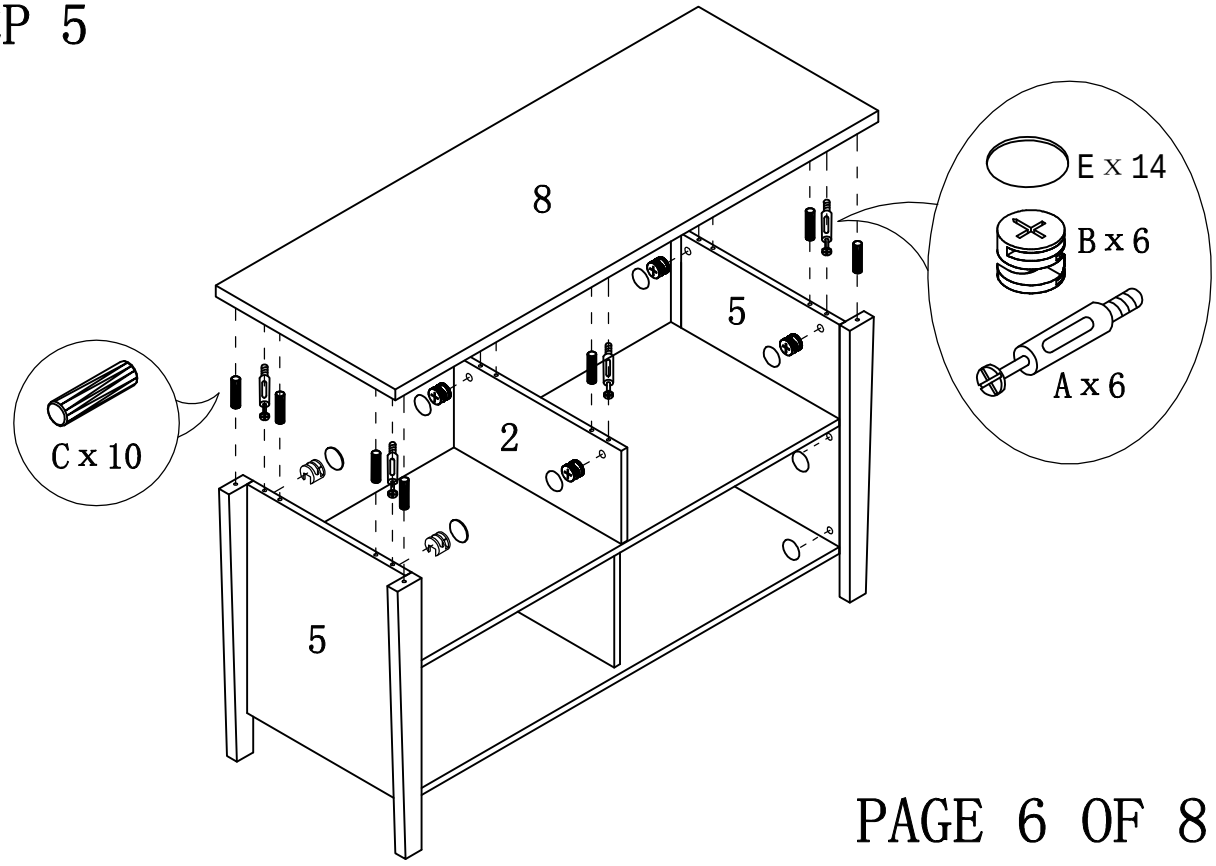

ASSEMBLY INSTRUCTION

ITEM#:29261
161565 161566

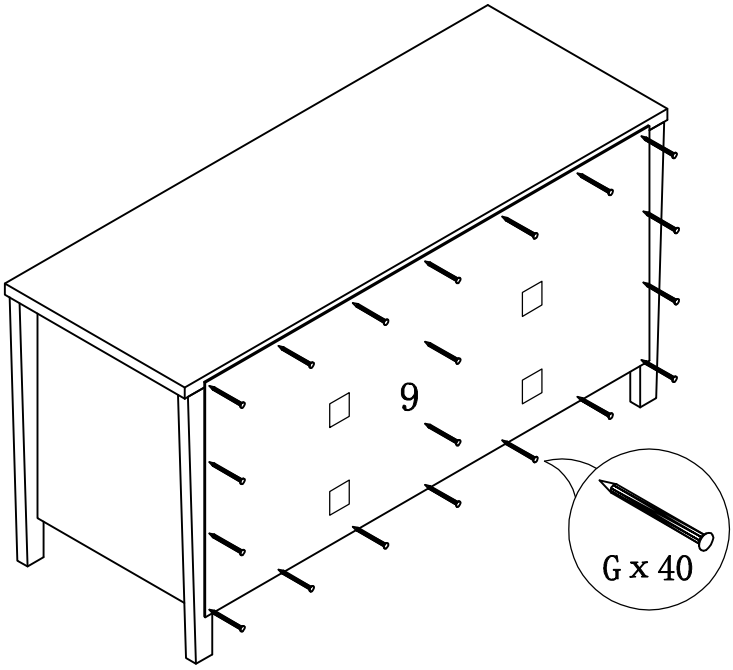

STEP 6

STEP 7

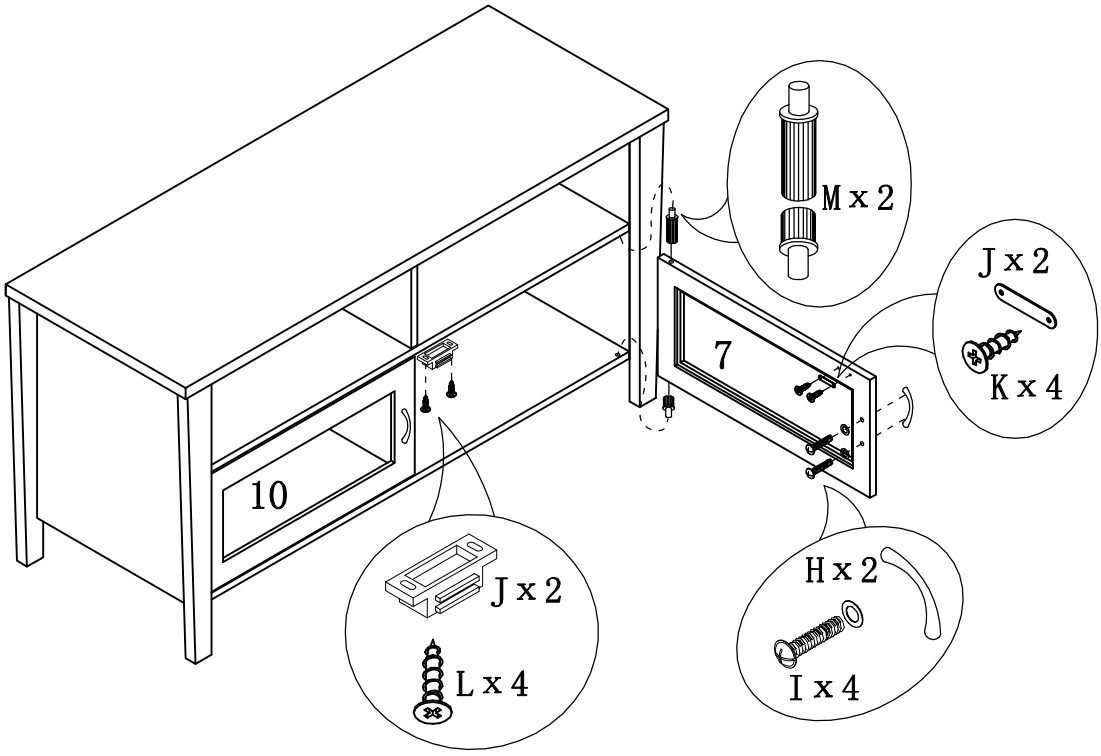

ANTI-TIPPING STRAP INSTRUCTION

HARDWARE(INCLUDED):

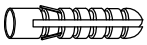
DRYWALL ANCHOR Φ8X40 X 1PC

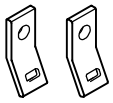
METAL BRACKETS 12×12×1 X 2PCS

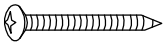
DRYWALL SCREW Φ5X40 X 1PC

STRAP 197×5×1 X 1PC

FLATHEAD SCREW Φ4X25 X 1PC

TOOLS NEEDED (NOT INCLUDED):

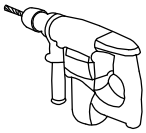
DRILL & DRILL BIT

LIGHT HAMMER

Note: Hardware included only compatible with standard drywalls.

STEP 1

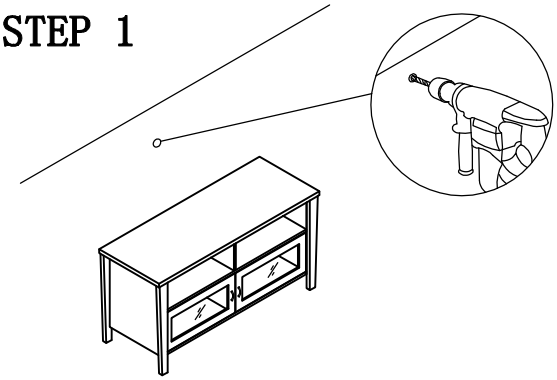

1. Find spot on wall 1″ below top of item.
2. Using a drill bit slightly thinner than anchor ,drill hole into drywall.

STEP 2

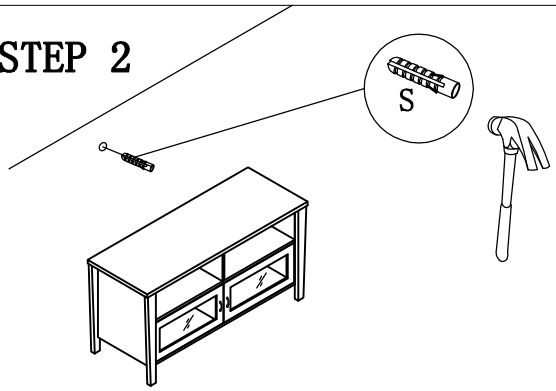

1. Use a light hammer to tap anchor into hole.
2. Anchor should fit snugly. If hole is too small, drill again to increase hole size .Do not force anchor into wall.

STEP 3

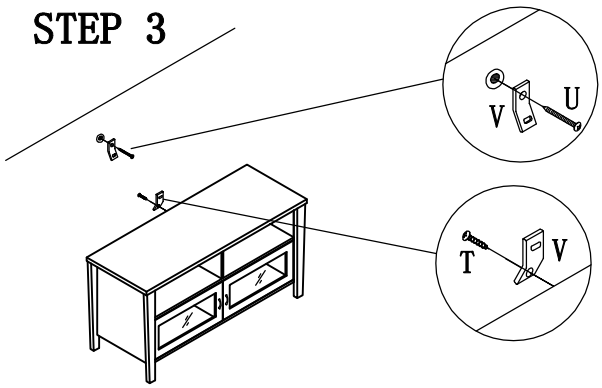

1. Insert drywall screw into metal bracket and into drywall anchor.
2. Insert flathead screw into second metal bracket and into back of item.along top edge.

STEP 4

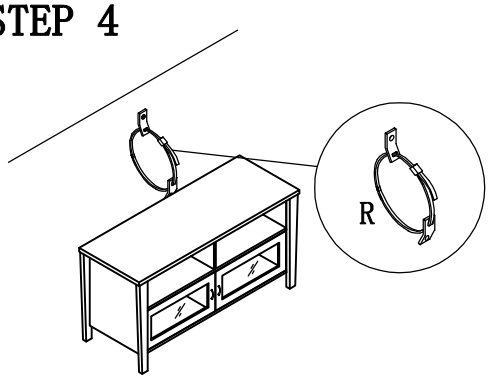

1. Insert strap thru bracket attached to wall. then thru bracket on item , and into head of strap.
2. pull lightly til strap stops.

Assembly is complete.